EMF & Potential Difference in Circuits

Exam code: 0625 & 0972

Download PDF

Written by: Lindsay Gilmour
Reviewed by: Caroline Carroll
Updated on 1 October 2024

EMF in series

- When several cells are connected together in series, their combined e.m.f. is equal to the sum of their individual e.m.f.s

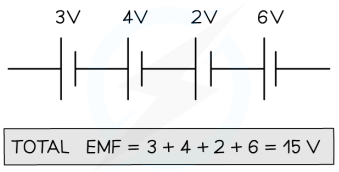

The total e.m.f. of these cells is equal to the sum of their individual e.m.f.s

Help me understand

SaveMyExams

Did this video help you? Yes No

Potential difference in series circuits

Extended Tier Only

Stuck on something?
Ask questions and get help with exactly what you're revising.
Got it

Potential difference in a series circuit

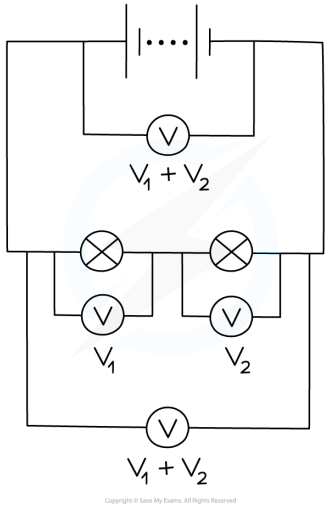

In a series circuit the components share the e.m.f. of the power supply

Worked Example

In the circuit diagram below, the power source has an e.m.f., *E*, of 16 V. There is a potential difference of 10 V across component X. Calculate the potential difference across component Y.

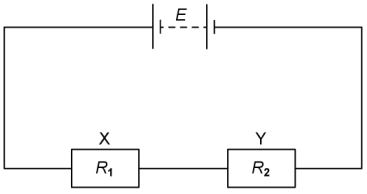

Answer:

Step 1: Recall the rule for potential difference in series

- The sum of potential differences across components in series is equal to the e.m.f. across the power source

Step 2: Write an equation to determine the potential difference across Y

$$E = V_X + V_Y$$

- Where:
  - *E* is the e.m.f. of the power source = 16 V
  - V_X is the potential difference across X = 10 V

- $V_X = 10$ V

Step 3: Substitute in the known quantities and calculate V_Y

$$16 = 10 + V_Y$$

- Therefore, the potential difference across Y is 6 V

Potential difference in a parallel circuit

Extended Tier Only

- The potential difference across **each** branch of a parallel circuit is the same as the e.m.f. of the power source

Potential difference in a parallel circuit

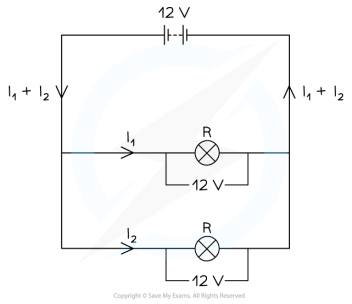

The power source has an e.m.f. of 12 V and there is a potential difference of 12 V across each branch

- It is important to notice that the potential difference in a parallel circuit is equal across each **branch**
  - In the example above, if one branch in the circuit contained multiple components, the 12 V would be **split** between the components on that branch

Teacher only

New! Exclusive Teacher-Only Questions

- Fresh, expert-written questions
- Students can't access them
- Fair accurate tests - built fast

Explore in Test Builder →

Resources

Learning Hub

Scholarship

Join

Past Papers

Solution Banks

Sitemap

Dashboard

Overview

Brand ambassador

Profile

Subscription

Settings

Log out

Company

About us

Exam Specificity

Content Quality

Promotions

Jobs

Terms

Privacy

Cookie Policy

Help and Support

Subjects

Biology

Chemistry

Physics

Maths

Geography

English Literature

Psychology

All Subjects

© Copyright 2015–2026 Save My Exams Ltd. All Rights Reserved.

Neither IBO nor College Board were involved in the production of, and do not endorse, the resources created by Save My Exams.